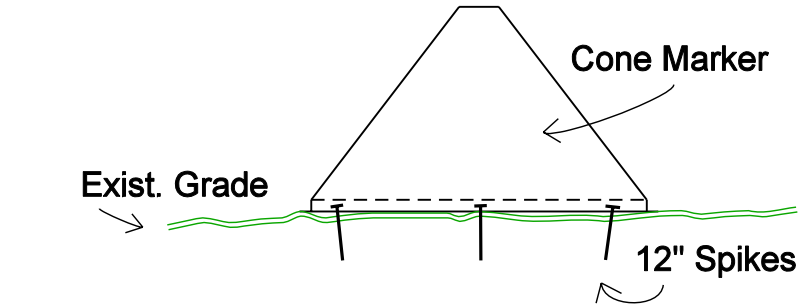

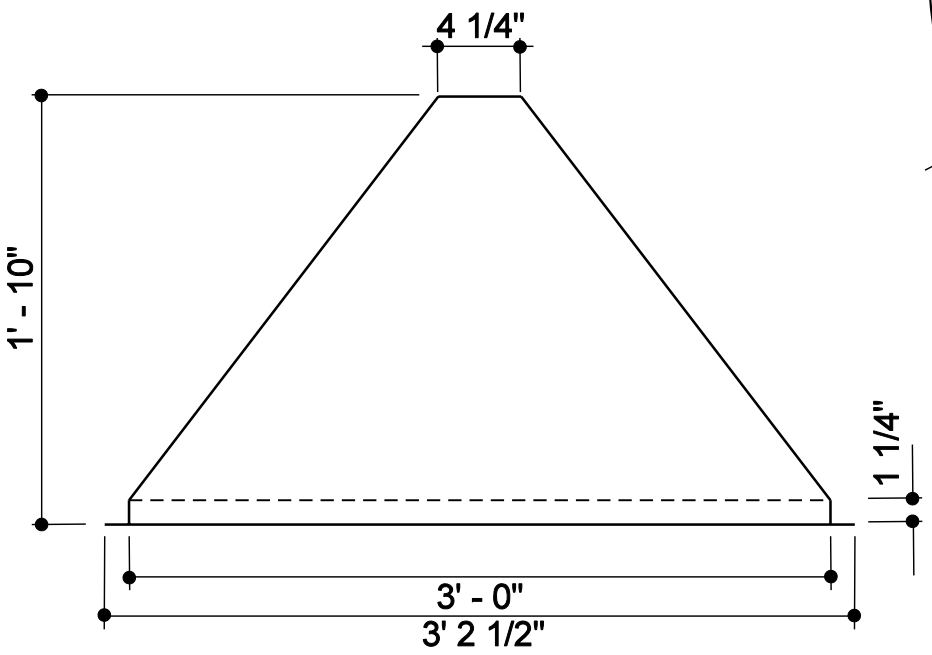

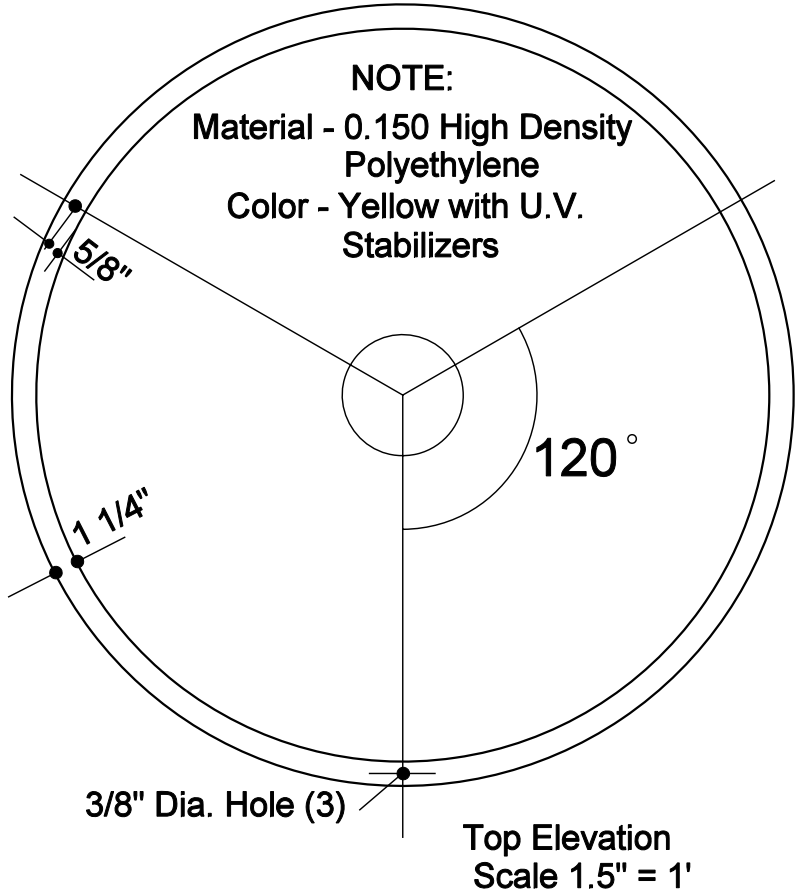

TURF RUNWAY - PLASTIC
CONE MARKER
OFFICE OF AERONAUTICS

5/6/06